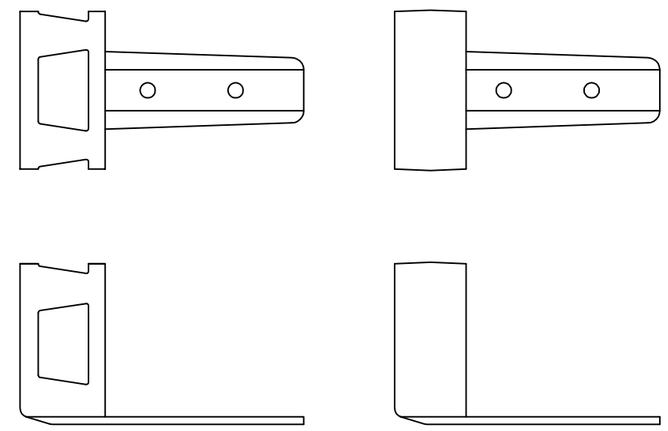

VENTED CLIP

STANDARD CLIP

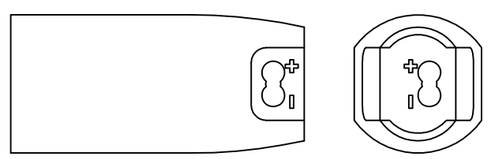

TERMINAL BLOCK CAP

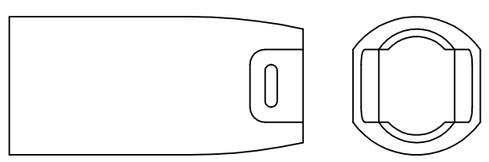

CO SENSOR CAP

PLUG END

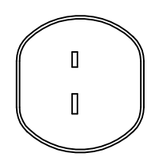

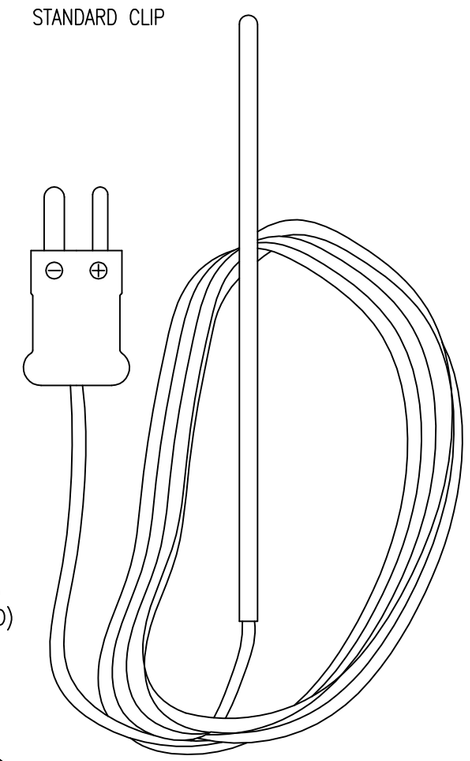

MODEL DW-USB-6-LCD
(THERMOCOUPLE WITH LCD)

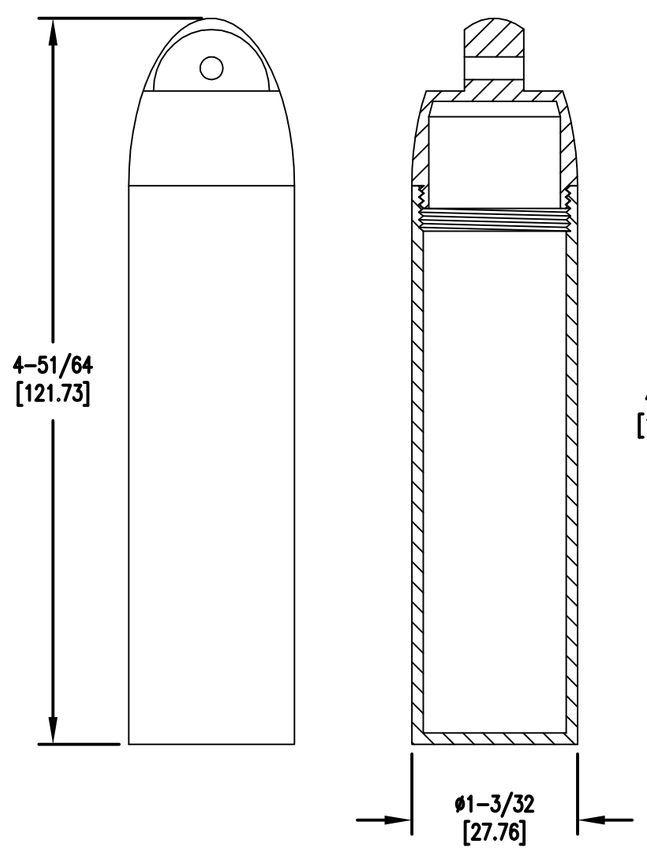

MODEL DW-USB-CASE

MODEL DW-USB-1-HT

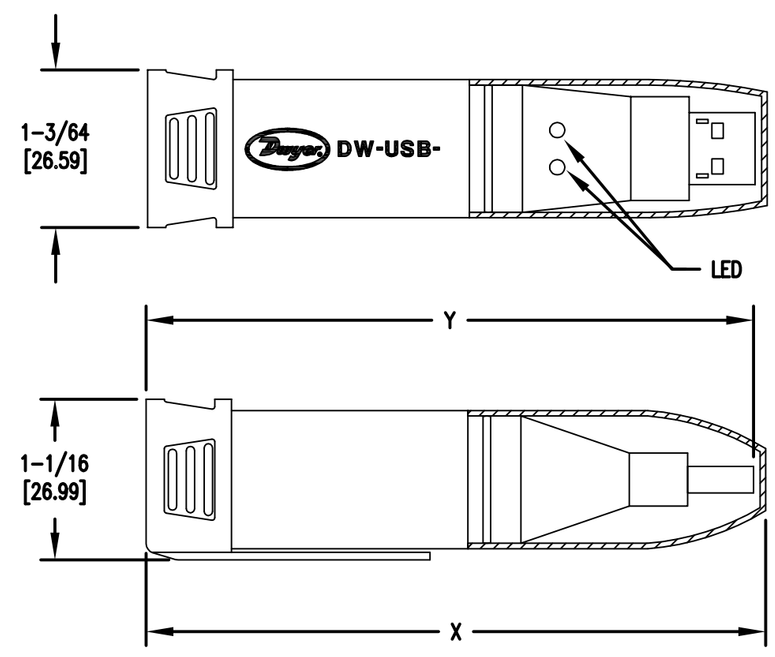

MODEL DW-USB-X

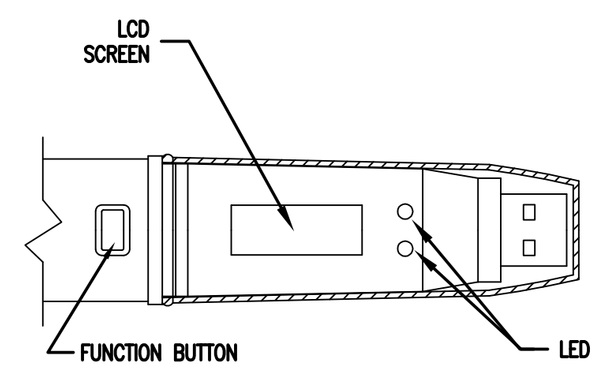

MODEL DW-USB-X-LCD

(CD) = CRITICAL DIMENSION
STANDARD TOLERANCES UNLESS NOTED:
ALL DECIMAL DIMENSIONS ± .005
ALL ANGLES ± 1°

NO.	CHANGES	BY/DATE

DATE
DWN BY
CHKD
APPD

SCALE

NAME: DW-USB

MATERIAL

FINISH

DWYER INSTRUMENTS, INC.
MICHIGAN CITY, INDIANA 46360 U.S.A.

ACAD2002

NOTICE: This drawing and the principles and elements of design embodied therein are the exclusive property of DWYER INSTRUMENTS, INC. and are not to be communicated, disclosed, reproduced or used except as previously authorized in writing by such corporation and must not be submitted to outside parties for examination without the written consent of said corporation.

3

FR. NO.